REV	DATE	ECO	DESCRIPTION	BY	CK
00	10/14/94		RELEASED	GO	

CONTROLLED COPY
ISSUED TO Newburyport
DATE OCT 18 1994

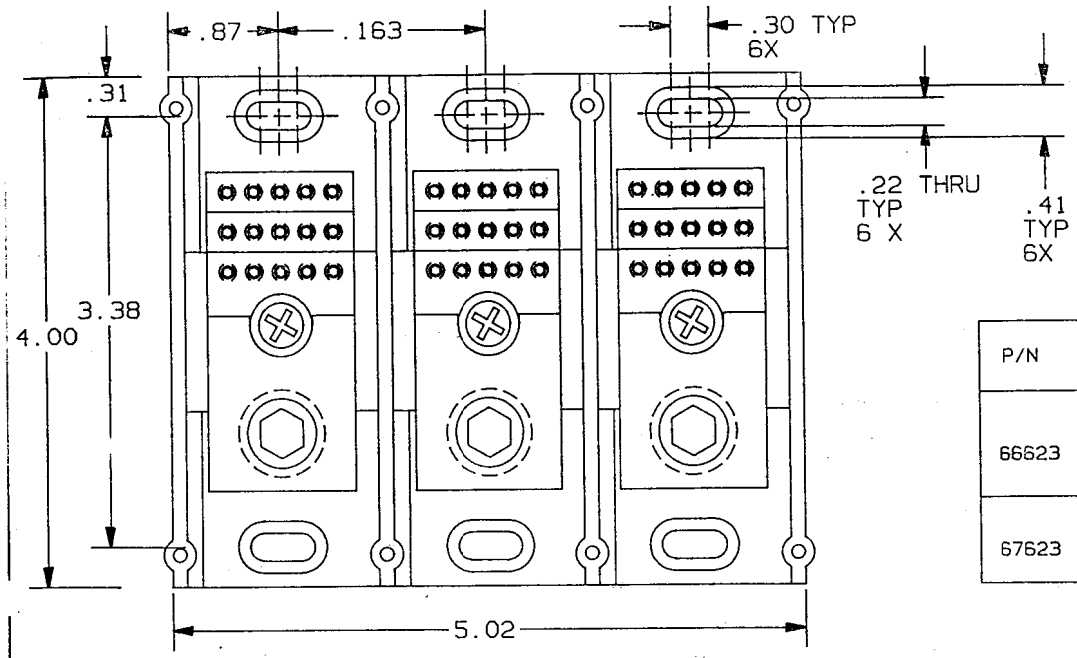

P/N	WIRE RANGE & TORQUE (IN-LBS)				UL		CSA
	PRIMARY		SECONDARY				
	RANGE	TORQUE	RANGE	TORQUE	FILE #	GUIDE #	REPORT #
66623	350 MCM-#6	350 MCM-#6 275	#10-#14	#10-#14 15	E73571	XCFR2	LR69363
67623	350 MCM-#6	350 MCM-#6 275	#10-#14	#10-#14 15	E73571	XCFR2	LR15469

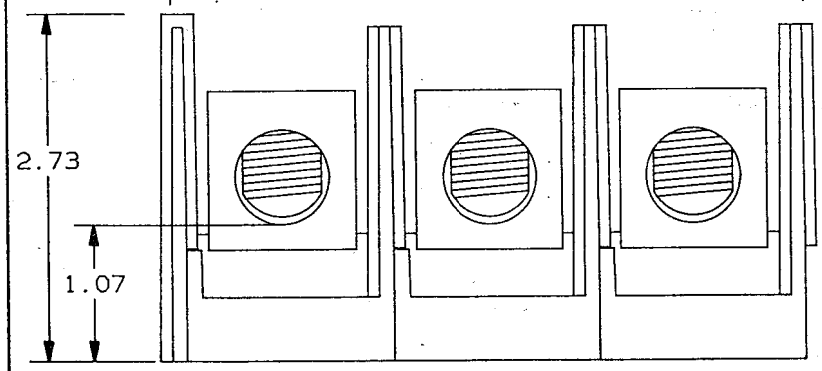

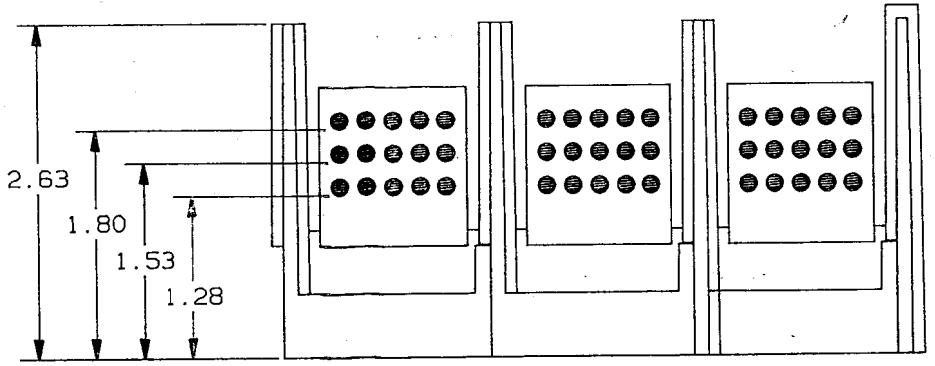

2. (1) 350MCM X (15) #10, 3 POLE, 600V.

1. MATERIAL COMPOSITION AND RATING:
   BASE: THERMOPLASTIC 125°C RTI
   CONNECTOR: ALUMINUM OR COPPER ALLOY-TIN PLATED

NOTES: UNLESS OTHERWISE SPECIFIED

P/N 66623 (CU ONLY)
67623 (CU-AL)

GOULD
GOULD INC.
P.O. BOX 728
HABBLE FALLS, TX 78654
CIRCUIT PROTECTION DIV.

DRAWN BY:	DATE:	INIT. REL.
KDS	10/94	
CHECKED BY:	DATE:	SCALE:
AE	10/94	NONE

DESCRIPTION: PDB

TOLERANCE TO BE APPLIED UNLESS OTHERWISE SPECIFIED: .XXXX±.00051, .XXX±.0051, .XX±.011, .X±.031 X/X±1/32
UNSPECIFIED ANGLES±1°, SPECIFIED ANGLES±0°30'
DIMENSIONS APPLY AFTER PLATING
ALL SURFACES TO BE 125√ UNLESS OTHERWISE SPECIFIED
BREAK ALL SHARP EDGES
THIS DRAWING AND ALL INFORMATION THERE ON IS THE PROPERTY OF GOULD INC. AND IS SUBJECT TO RETURN ON DEMAND. THIS INFORMATION IS CONFIDENTIAL AND MUST NOT BE MADE PUBLIC OR COPIED UNLESS AUTHORIZED.
REFDOC:

IDENTIFICATION NO. & REVISION: 05B0498 00